GATE VALVE MODEL TR-GT4

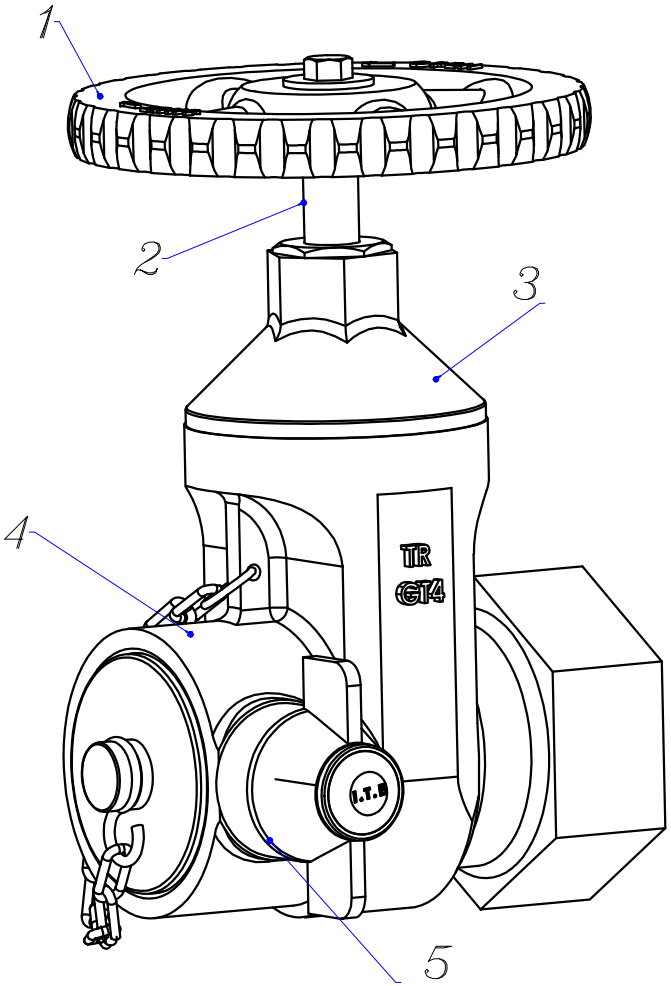

Item	PART NAME	MATERIAL
01	HANDWHEEL	D.CAST IRON
02	STEM	STEEL
03	BONNET	GUNMETAL
04	BODY	GUNMETAL
05	*RELEASE PLUNGER*	*BRASS*

INLET CONNECTION : 2 1/2"

Test Pressure : 21 Bar

Normal Pressure : 7 Bar

NOTE: GATE VALVE MODEL TR-GT4

Date	Design	Drawn	Checked	REV.

Part Name: Total

Material: As above chart

Drawing No: GT1-01

PROJECT:

I.T.E

TOL.: DIN-7168m

Size: A4

Scale:—

Sheet: 1 Of 1

QTY. :